TOA-150
35-Flattener System Chart(TX)

6. Camera angle adjuster[TFP1106]*
8. Coupling TW [TPKA1061]*
13. 2" Sleeve [TCN0020]*
14. Coupling `S" [TSP0030]*
32. T-mount**
33. Wide T-mount
34. Digital SLR
35. CA35 TOA [TCA150]**
36. TCA-4 [TFP0310]**
46. 1 1/4" Ocular adapter[TOA0200]**

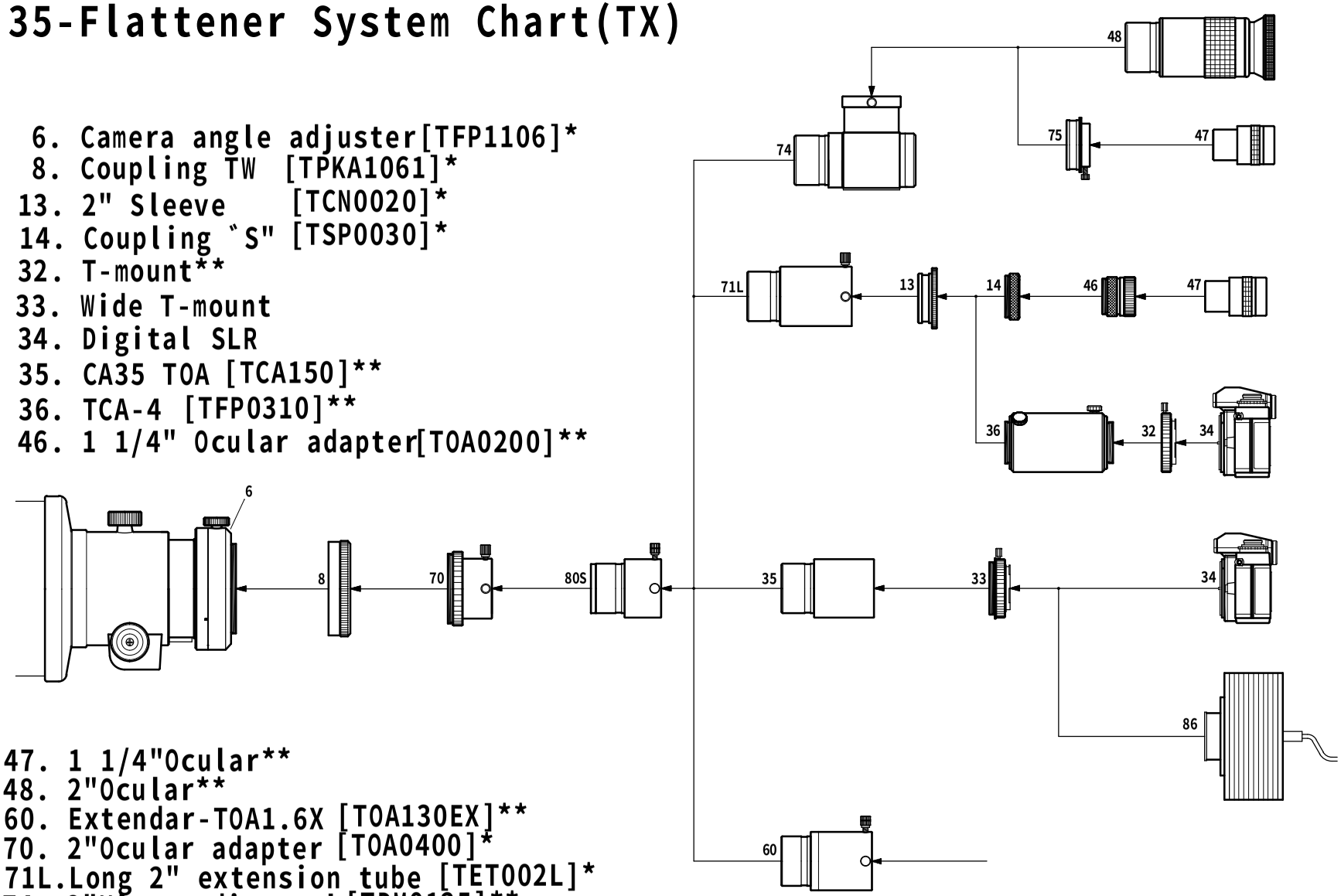

47. 1 1/4"Ocular**
48. 2"Ocular**
60. Extendar-TOA1.6X [TOA130EX]**
70. 2"Ocular adapter [TOA0400]*
71L.Long 2" extension tube [TET002L]*
74. 2"Mirror diaganal [TDM0125]**
75. Adapter DM [TDM0125]**
80S.35-Flattener TOA[TOA130FN]**
86. CCD camera**

* Standard with OTA
** Optional Item